Copyright FCI.

FCIconnect.com

P/N	DIM.B
10118066-XXX6XXXLF	3.43

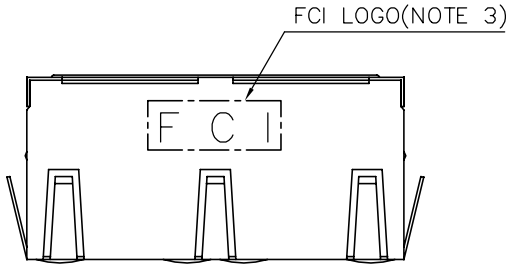

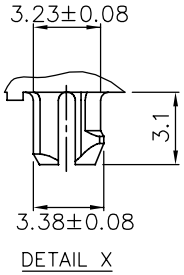

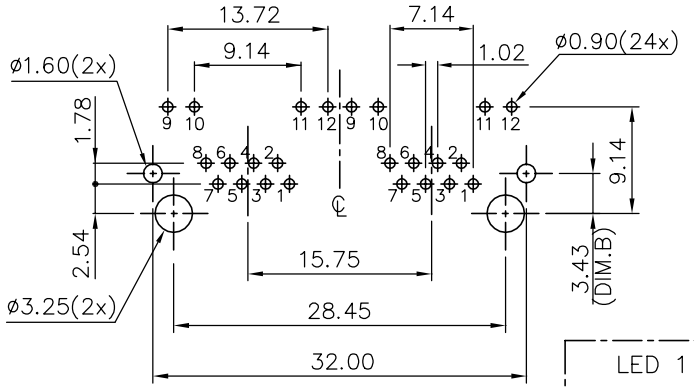

RECOMMENDED PCB LAYOUT
RECOMMENDED PCB THICKNESS: 1.6mm
TOLERANCE:±0.05mm (TOP VIEW)

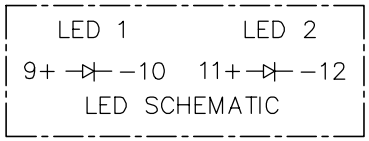

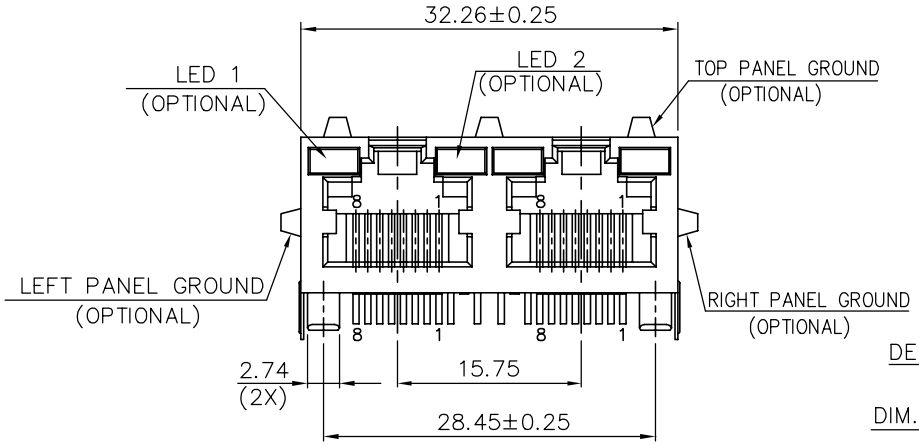

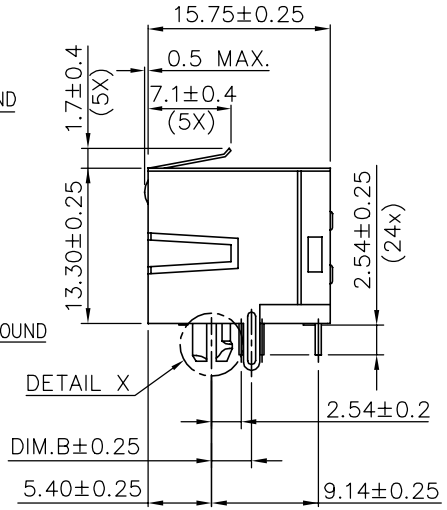

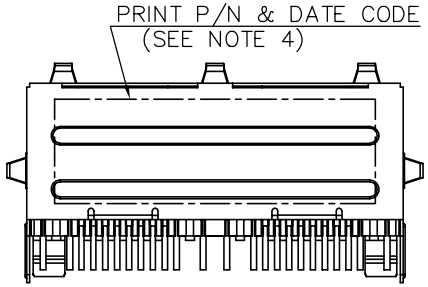

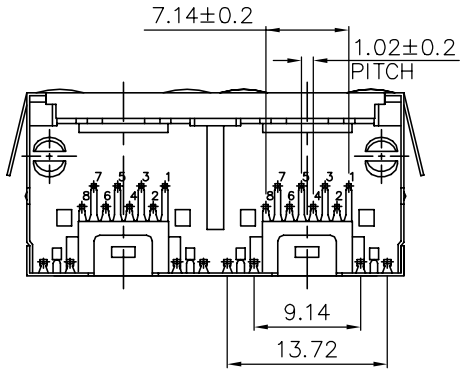

mat'l. code				surface ASME Y14.5	tolerance ASME Y14.5	projection	product family GANGED MJACK
ltr	ecn no	dr	date	tolerances unless otherwise specified			title
A		WL	11/04/11	angles	linear X.X±0.25	MM [INCH]	CAT 3 MULTI-PORTS TAB UP 1x2 WITH SHIELD, W/ LED
B	ELX-N-13968	Henry	01/31/13		X.XX±0.13		
				X°±1°	X.XXX±0.05	scale	
				dr	WENDY CHEN	05/11/11	dwg no 10118066 sheet 1 of 2 size A4
				engr	WENDY CHEN	05/11/11	
				chr	WENDY CHEN	05/11/11	
				appd	GARY HSIEH	05/11/11	type CUSTOMER Drawing

sheet index	revision	B	B
	sheet	1	2

form: A4mmXLc

PDS: Rev :B STATUS:Released Printed: Feb 01, 2013

Copyright FCI.

NOTE:

1. MATERIAL:
   HOUSING: HIGH TEMPERATURE THERMOPLASTIC, UL94V-0
   COLOR: BLACK.
   CONTACTS: COPPER ALLOY.
   SHIELD: COPPER ALLOY.
   LED SOLDER TAIL: STEEL.
2. FINISH:
   CONTACTS: 50u" MIN. NICKEL UNDER PLATED OVER ALL.
   SELECTIVE GOLD PLATED ON CONTACT AREA,
   1u" GOLD PLATED ON SOLDER TAIL.
   LED SOLDER TAIL: 100u" MIN. BRIGHT TIN OVER
   50u" NICKEL UNDER PLATED.
   SHIELD: 20u" MIN. NICKEL OVER ALL.
3. LASER MARK FCI LOGO ON THE TOP OF SHIELD.
4. "DATE CODE" DESCRIPTION:
   XX XX
   WEEK
   YEAR (EX. : 10--2010)
5. PRODUCT PERFORMANCE PER SPEC. : GS-12-0990.
6. PACKING SPEC. : GS-14-2170.
7. THIS PRODUCT MEETS THE EUROPEAN UNION DIRECTIVE AS DESCRIBED IN GS-22-008.
8. THE HOUSING WILL WITHSTAND EXPOSURE TO 260°C PEAK TEMPERATURE FOR 5 SECONDS IN A WAVE SOLDER APPLICATION WITH A CIRCUIT BOARD.

APPEARANCE VIEW

WITH LED	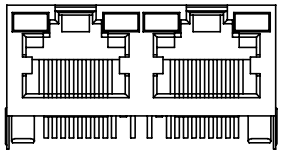 10118066-XX0XXXXLF (WITHOUT PANEL GROUND)	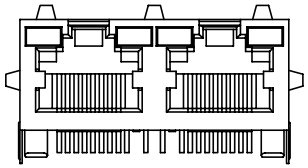 10118066-XX3XXXXLF (3 SIDES PANEL GROUND)
W/O LED	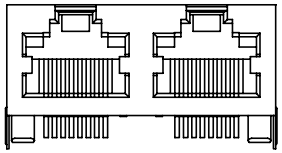 10118066-X00XXXXLF (WITHOUT PANEL GROUND)	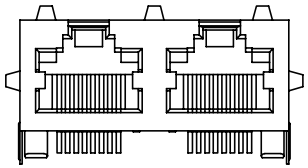 10118066-X03XXXXLF (3 SIDES PANEL GROUND)

9. PART NUMBER DESCRIPTION:
   10118066-X X X X X X X LF
   - LF: LEAD FREE
   - X: 0 : RESERVED (NOT USED)
   - X: PACKAGING
     1 : TRAY
   - X: OPTIONAL BACK SHIELD TAB
     0 : WITHOUT BACK SHIELD TAB
   - X: OPTIONAL RIGHT / LEFT SHIELD TAB
     6 : DIM.B=3.43

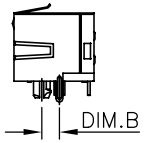

   - X: OPTIONAL PANEL GROUND
     0 : WITHOUT PANEL GROUND
     3 : TOP/RIGHT/LEFT 3 SIDES WITH PANEL GROUND
   - X: LED COLOR
     0 : WITHOUT LED
     1 : LED1: GREEN / LED2: YELLOW
     2 : LED1: YELLOW / LED2: GREEN
     3 : LED1: GREEN / LED2: GREEN
   - X: CONTACT AREA PLATING
     1 : 15u" GOLD PLATING
     2 : 30u" GOLD PLATING
     5 : 1u" GOLD FLASH PLATING

mat'l. code				surface ASME Y14.5		tolerance ASME Y14.5	projection	product family	GANGED MJACK
ltr	ecn no	dr	date	tolerances unless otherwise specified				title	CAT 3 MULTI-PORTS TAB UP 1x2 WITH SHIELD, W/LED
B				angles	linear	X.X±0.25	MM [INCH]		
				X°±1°		X.XX±0.13			
						X.XXX±0.05	scale		
				dr	WENDY CHEN	05/11/11	FCI	dwg no 10118066	sheet 2 of 2 size A4
				engr	WENDY CHEN	05/11/11			
				chr	WENDY CHEN	05/11/11			
				appd	GARY HSIEH	05/11/11		type	CUSTOMER Drawing
sheet index	revision sheet								

PDS: Rev :B STATUS:Released Printed: Feb 01, 2013